# MI A3

## Hydronic wall panels

2.7 kW÷4.4 kW



Designed to fully meet efficiency, low-noise, and aesthetic requirements. The microprocessor control ensures precise comfort in the room. Three-way valve installed on board the unit. ABS casing with high mechanical strength and excellent ageing resistance; DC brushless fan motor; water coil with large heat exchange surface equipped with air vent valve and condensate drain; horizontal fins and independent vertically adjustable deflectors; complete function management via LCD remote control; cooling and heating operation with three fan speeds plus Auto mode. Manual restart function and Timer function.

**As standard:**
Three-way 230 V diverter valve with compact-type electric actuator, normally closed and equipped with protective cover, air bleed valve, LCD remote control, volt-free contact for remote ON-OFF, ModBus input, condensate collection tray and drain.

**Limit Switch Micro Switch**
The unit is equipped with a limit micro switch installed on the three-way diverter valve. This micro switch is wired to a dedicated terminal block from which the signal can be used for various purposes. In particular, this volt-free contact is useful for implementing system automation functions.

## Accessories

- **WRC11**: Compact multifunction wired controller
- **WRC16**: Allows control of up to 16 indoor units using a single wired controller via the XYE ports.

| | | | 26A3 | 35A3 | 42A3 |
|---|---|---|---|---|---|
| **Cooling** | (1) Cooling capacity | kW | 2,7/2,59/2,39 | 3,81/3,3/2,88 | 4,47/3,98/3,48 |
| | | kBTU/h | 9,2/8,8/8,1 | 12/11,2/9,8 | 15,2/13,5/11,8 |
| | Power input | W | 13/11/10 | 34/22/15 | 26/18/13 |
| | Water flow rate | m³/h | 0,48/0,46/0,42 | 0,67/0,57/0,51 | 0,77/0,68/0,61 |
| | Water pressure losses | kPa | 31,61/28,63/25,36 | 56,75/41,23/33,02 | 41,17/33,54/27,05 |
| **Heating** | (2) Heating capacity | kW | 2,94/2,8/2,58 | 4,3/3,65/3,09 | 4,84/4,23/3,62 |
| | | kBTU/h | 10/9,5/8,8 | 14,6/12,4/10,5 | 16,5/14,4/12,3 |
| | Power input | W | 11/11/9 | 31/20/14 | 22/16/12 |
| | Water flow rate | m³/h | 0,51/0,49/0,46 | 0,73/0,64/0.56 | 0,84/0,73/0,64 |
| | Water pressure losses | kPa | 32,66/34,89/30,24 | 51,86/47,53/35,69 | 36,82/33,83/26,26 |
| **Sound data** | (3) Maximum-medium-minimum sound pressure | dB(A) | 32/30/27 | 45/39/35 | 38/34/30 |
| | Hydraulic connections | Ø | 3/4" | 3/4" | 3/4" |
| | Airflow | m³/h | 492/454/400 | 825/689/590 | 862/741/634 |
| **Power supply** | Power supply | V~/Ph/Hz | 230/1/50 | | |
| | Absorbed current | A | 0,2 | 0,4 | 0,3 |
| **Heat exchange coil** | Rows | | 2 | 2 | 2 |
| | Max. pressure | MPa | 1.6 | | |
| | Diameter | mm | Φ7 | | |
| | Condensate drain | mm | OD Φ20 | | |
| | Heat exchanger coil length | mm | 635x26.74 | | 785x26.74 |
| | Fin type | | Hydrophilic aluminum | | |
| | No. of circuits | | 5 | 5 | 7 |

Not equipped with a condensate drain pump.
(1) Cooling capacity: Inlet air temperature: 27°C d.b. / 19°C w.b.
Water inlet/outlet temperature: 7°C / 12°C
(2) Heating capacity: Inlet air temperature: 20°C d.b.
Water inlet/outlet temperature: 45°C / 40°C
(3) Noise level tested in a semi-anechoic chamber.

## Dimensional Drawings

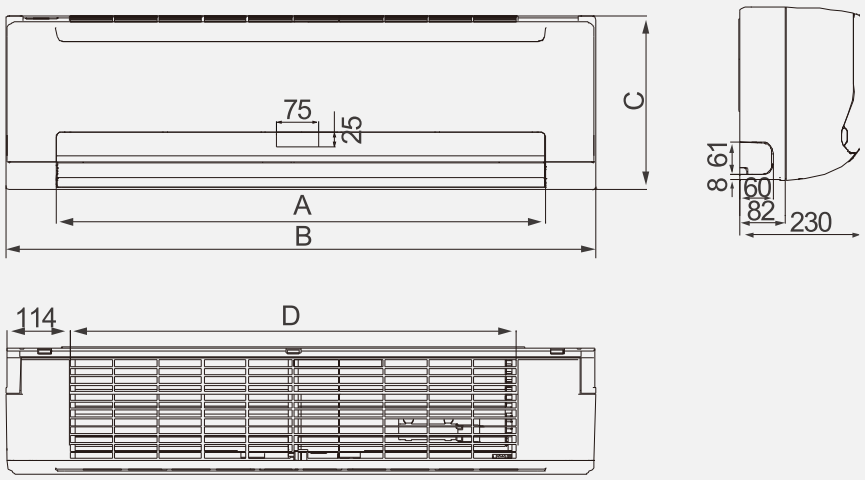


| | 26A3 | 35A3 | 42A3 |
|---|---|---|---|
| A | 732 | 732 | 892 |
| B | 915 | 915 | 1.072 |
| C | 290 | 290 | 315 |
| D | 663 | 663 | 813 |
| Kg | 12,7 | 12,7 | 15,1 |

Dimensions in mm

Left-hand side hydraulic connections

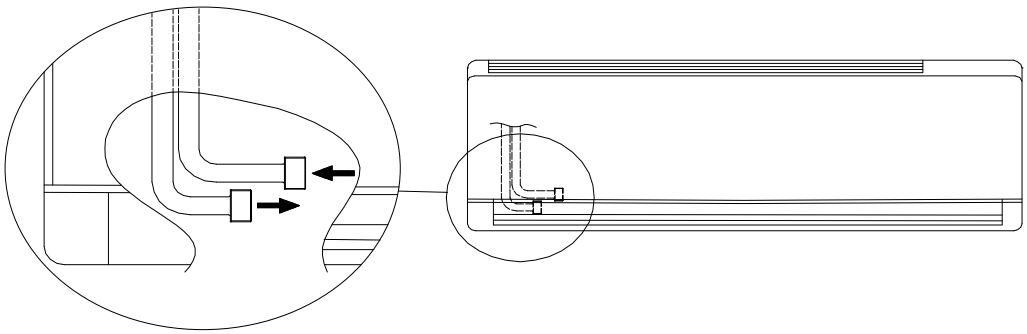

## Price list

| MI A3 | | | 26A3 | 35A3 | 42A3 |
|---|---|---|---|---|---|
| Hydronic wall-mounted unit | | code | 011422020026 | 011422020035 | 011422020042 |
| | | € | 801 | 885 | 1.108 |
| ACCESSORIES | | | | Code | € |
| WRC11 | Compact multifunction wired controller | | | 012108010034 | 166 |
| WRC16 | Allows control of up to 16 indoor units by means of a single wired remote controller via the XYE terminals. | | | 012108010095 | 205 |